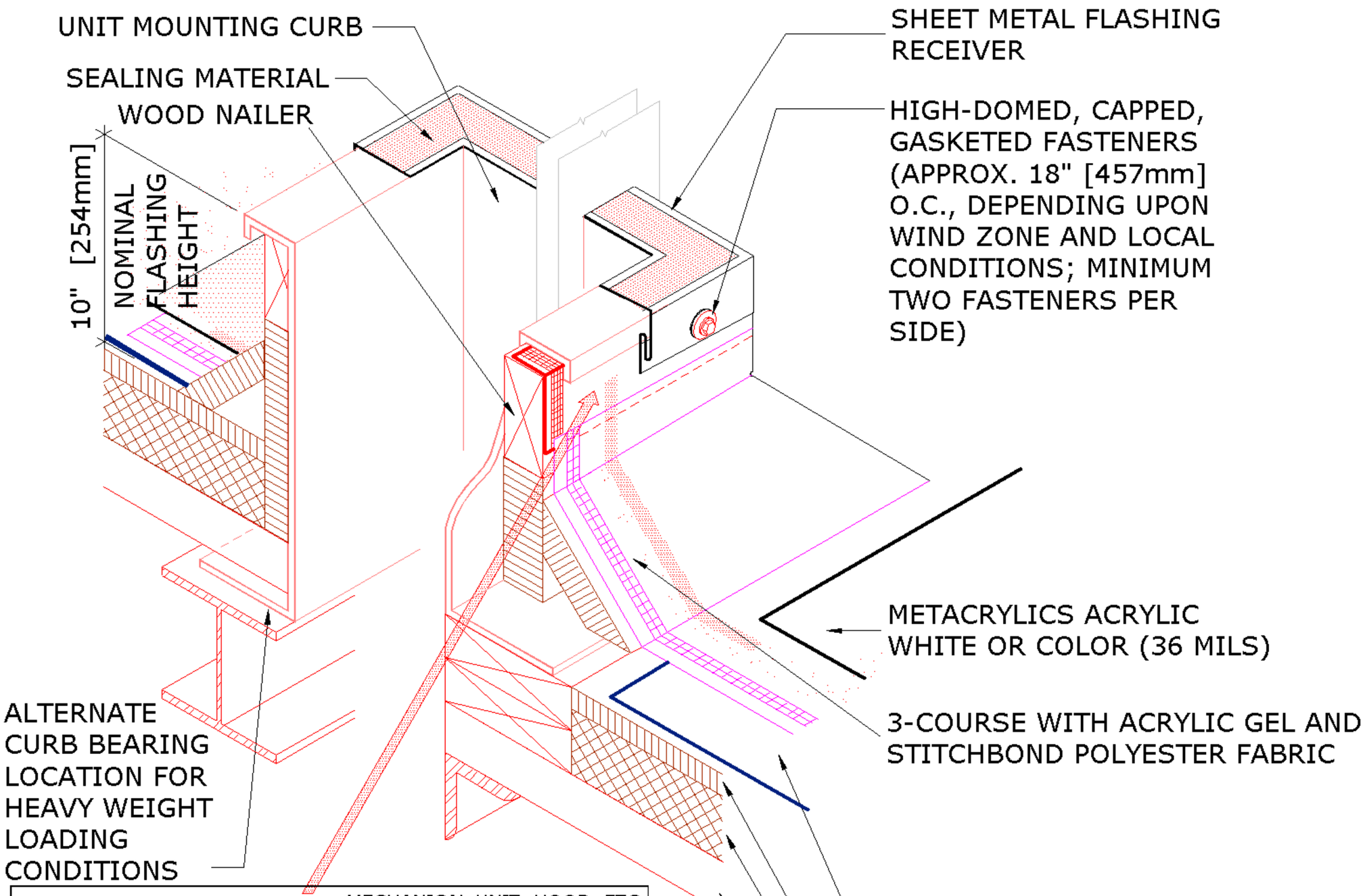

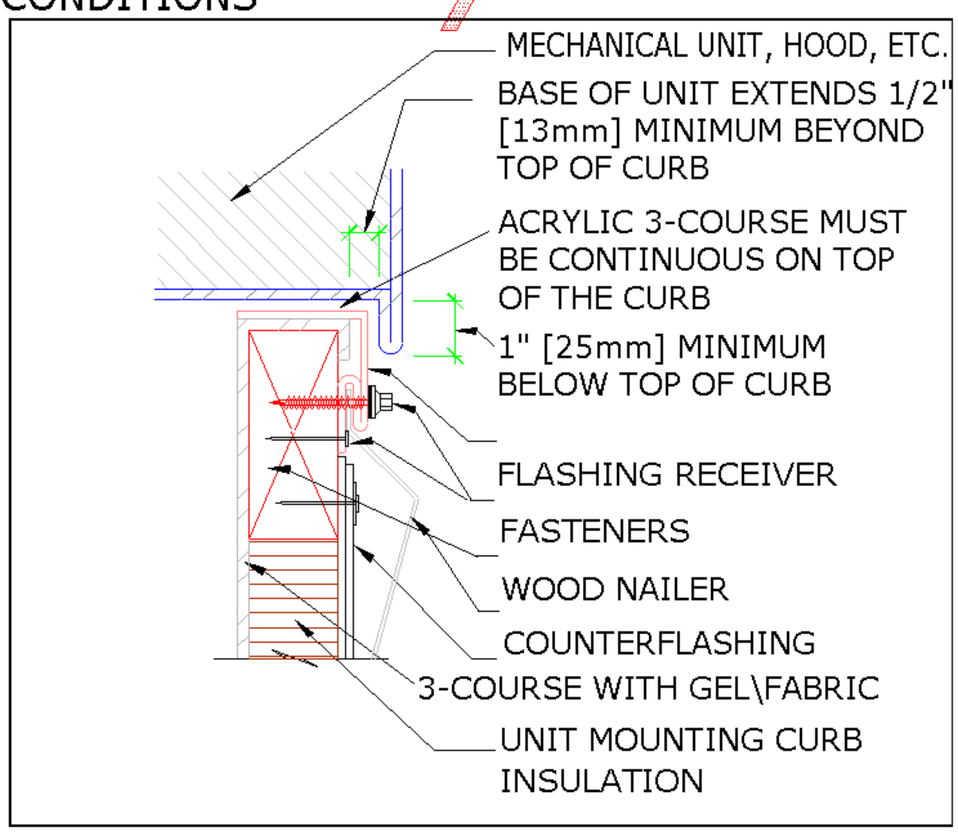

NOTES:

1. THE CURB'S TOP WOOD NAILER, AND SEAL STRIP ARE TO BE SUPPLIED BY THE CURB MANUFACTURER.
2. ATTACH NAILER TO DECK WITH SUITABLE FASTENERS.
3. WHEN POSSIBLE, THE MECHANICAL UNITS SHOULD NOT BE SET UNTIL THE ROOF MEMBRANE AND 3-COURSE FLASHING HAVE BEEN INSTALLED.

RAISED CURB DETAIL FOR ROOFTOP AIR HANDLING UNITS AND DUCTS (PREFABRICATED METAL CURB)

META-14